Installation Instructions

March 2004

Audio, Satellite Radio

Accessory Development

SUBJECT

Sirius Retrofit Kit for X3 without Navi - P/N 84 11 0 390 240

MODEL

X3 (E83): Select Vehicle Production 12/03 – On*

** Vehicle must have Sirius Pre-wiring (SA693) and no Navigation system.*

SUGGESTED INSTALLATION TIME: 0.5 Hours **

***Additional Installation time may be necessary for installation of 6-Disc CD Changer together with Satellite Radio, please refer to page 4.*

The instructions below are developed for BMW vehicles and are not be compared to any other existing instructions for vehicles other than BMW. No methods other than those specified in this document are to be used for installation in BMW vehicles. Left and right are determined from driver's seat.

Carefully read all instructions and supplements before proceeding with the installation. Reference should be made to TIS for instructions dealing with a stock part of the vehicle but not stated in detail in these instructions.

The instructions were complete and up to date at time of publication; however, changes to the vehicle or installation may have occurred. Please report any problems or changes noted with the installation to BMW Technical Hotline, along with VIN, date of manufacture and as much detail as possible.

PARTS INFORMATION

Contents of Kit – P/N 84 11 0 390 240

Description	QTY	BMW Part Number
Sirius Bracket	1	N/A
ALC Module	1	84 11 0 151 237
Screw (M4x6)	4	07 11 9 901 061
Clip Nut M6	3	41 35 7 060 601
Bolt M6x13	3	51 34 1 950 474

Additional Required Parts

Sirius Receiver 84 11 0 153 365

★ DO IT RIGHT THE FIRST TIME, ON TIME, EVERY TIME ★ ★

© 2004 BMW of North America, LLC

Procedure:

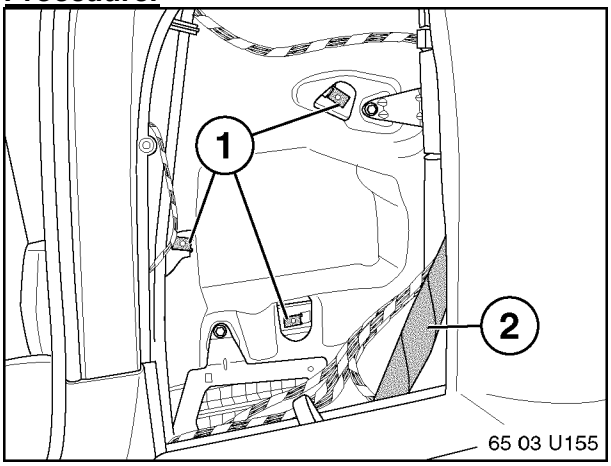

1. Disconnect vehicle battery.

2. Remove felt covers from 3 mounting points (1) and insert clip nuts in these 3 locations.

3. Locate Sirius connectors wrapped inside insulation padding (2). Remove connectors from padding and save padding for a later step.

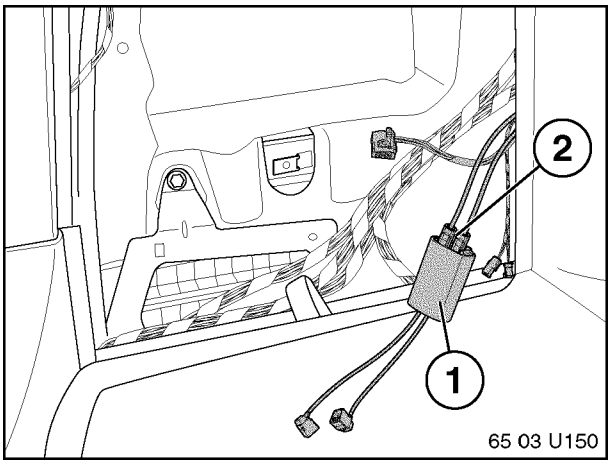

4. Install ALC (1) onto blue and white color-coded antenna connectors (2).

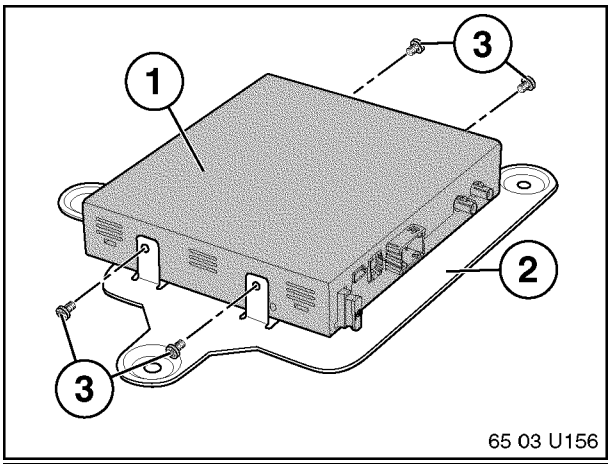

5. Install Sirius Receiver (1) to bracket (2) as indicated using 4 screws (3).

Note: Be sure to orient Sirius Receiver in bracket as indicated.

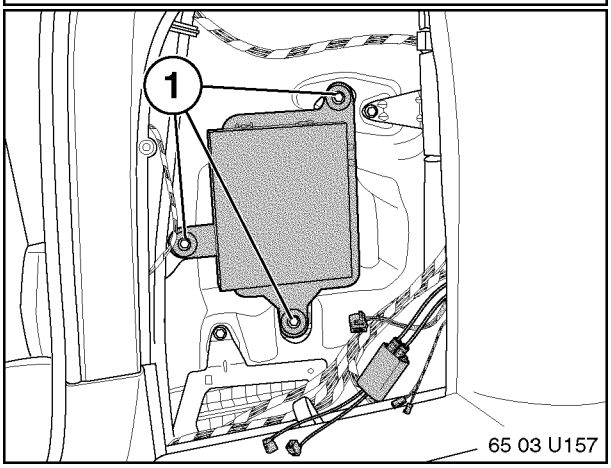

6. Install bracket to vehicle using 3 bolts (1).

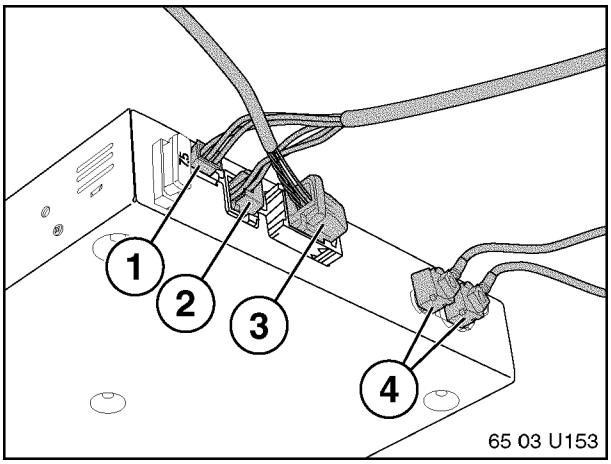

7. Connect power (1), audio (2) and antenna (4) connectors to receiver.

Note: CDC extension connector (3) is only required when accessory CD changer is installed in center console.

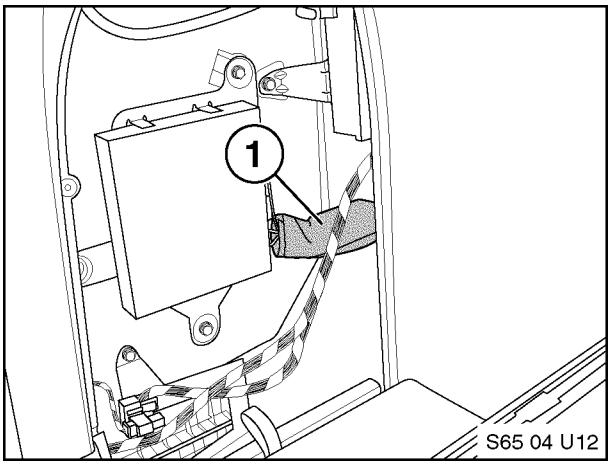

8. Secure loose wiring and ALC module with felt padding (1) to prevent rattling.

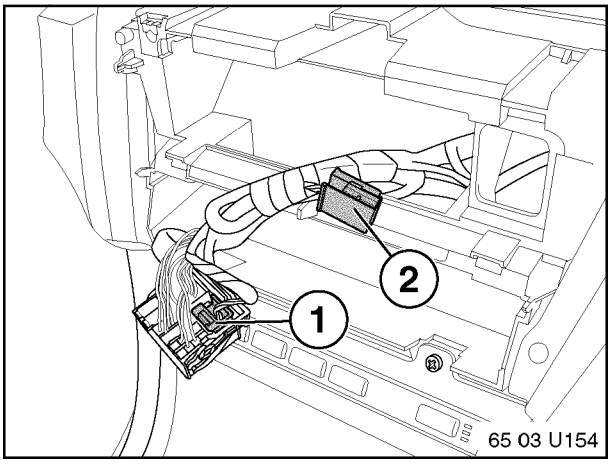

9. Remove radio from center dash via TIS.

10. Remove white 12-pin connector (1) located in lower part of radio connector. Replace with white 12-pin connector (2) labeled “CD-SDARS”, taped back to harness.

If vehicle has a CD Changer installed and does not have DSP audio system proceed to Step 13.

For vehicles with DSP audio system and CD Changer, or no CD changer installed, continue with next Step.

11. Re-install radio and re-assemble vehicle.

12. Re-connect vehicle battery.

Installation Complete.

Go to Activation Procedure outlined on last page.

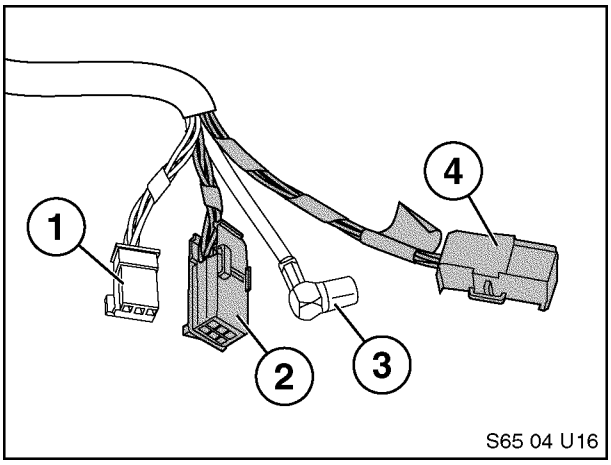

For vehicles with CD Changer and without DSP audio system:

13. Remove center console following instructions available through TIS. Remove CD Changer.

14. Switch 6-pin audio connector (2) from bottom of CD Changer with 6-pin connector (4) labeled “CD-SDARS”.

Note: Failure to perform this Step will result in no audio from CD Changer.

Note: Digital audio connector (3) is connected to CD changer only for vehicles with DSP audio system. Power/I-bus connector (1) is always connected to CD changer.

15. Re-install radio and re-assemble vehicle.

16. Re-connect vehicle battery.

Installation Complete.

Go to Activation Procedure outlined on last page.

VEHICLE CODING

There is no vehicle coding required for installation of Sirius receiver.

For installation of CD changer in X3 vehicles, please refer to vehicle coding procedure outlined in CD Changer Retrofit Installation Instructions 01 29 0 306 160.

BMW NA Sirius Satellite Radio Customer Activation Procedure:

Step 1: Locate vehicle outside so that the roof with has a clear **Line-of-Sight** to the sky. Make sure that vehicle is located at a distance greater than 10 feet from nearest building. (Do not place vehicle under a tree or other solid structure.)

Note: For BMW Centers located in downtown cities such as NYC or LA, it may not be necessary to locate vehicle outside. In this case, locate vehicle near window to receive Sirius signal and activate receiver.

Step 2: Turn key to position 1. (**KL-R**)

Step 3: Turn Radio **ON** by pressing knob.

Step 4: Press the "**MODE**" button repeatedly until Sirius Satellite Mode is activated. "**SIRIUS**" will be displayed.

Step 5: The receiver will now try to find any available Sirius Satellite Radio signal. "**ACQUIRING**" may flash in the display until a channel is found.
(If "ACQUIRING" continues to flash for more than 1 minute then no Sirius signal is available. Please re-locate vehicle and repeat Steps 1 – 4.)

Step 6: Channel 184 "**CH 184**" should be found and "**Preview**" should be displayed. Audio should also be heard at this time. (Channel 184 should be available on every receiver and was designed to allow technicians to confirm Sirius receiver functionality before activation.)

Step 7: If "**Preview**" is displayed and audio is functioning correctly (Check radio Balance and Fader), proceed to step 10. If not, go to next step.

Step 8: If "No Channel" is displayed, turn radio OFF, wait 10 seconds, and repeat Steps 3 & 4.

Step 9: Press channel up/down arrow keys repeatedly until Channel 184 is found and "Preview" is displayed. Allow receiver to update information. (Approx. 30 seconds) Audio should now be heard, "Preview" is displayed and Channel 184 should be the only available channel. If you are able to select other "unavailable" channels repeat Steps 3 – 6.

Step 10: Have completed **Sirius Satellite Radio Activation Worksheet** and contact Sirius to activate receiver. **Sirius Receiver ESN** can be found on bottom of Sirius receiver or by pressing "**SAT**" key on radio for greater than 1.5 seconds in Sirius "MODE" and ESN will be displayed. Please refer to Activation Worksheet for correct Sirius activation procedure.

Step 11: After Sirius Customer Service Representative activates receiver, it will take approximately 5 minutes or less for signal to reach the vehicle. Leave radio in Sirius Satellite mode with "Preview" displayed and key in KL-R position for approximately 5 additional minutes so that all satellite information may be downloaded into receiver for first time usage.

Step12: Turn Radio OFF by pressing knob, wait 10 seconds, and repeat Steps 3 & 4.

Step 13: Press channel up/down arrow keys to select available channels. All available channels can now be selected and/or stored in 18 Preset locations. (Please refer to Owner's Manual for additional Sirius Satellite Mode functionality and features.)

ACTIVATION COMPLETE

Note: If channels other that Channel 184 are not available, repeat Steps 12 & 13.
If channels are still not available, it may be necessary to repeat Steps 10 – 13 for additional activation attempt.