*Necessary preliminary tasks:*

- Remove insert in storage compartment at rear bottom

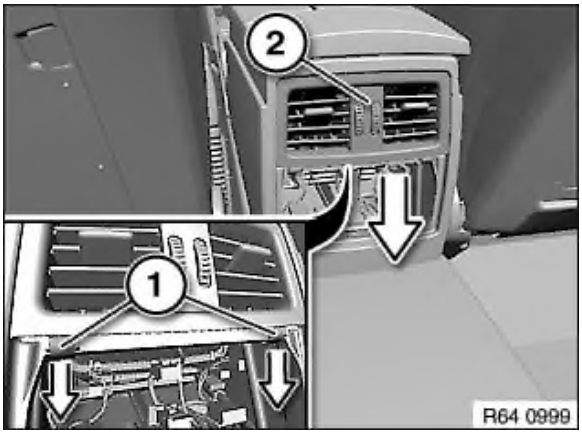


Detach clips (1) in direction of arrow.

Remove fresh-air grille (2) in direction of arrow and disconnect associated plug connection.

*Installation:*

Make sure rear cabin fresh-air grille (2) and clips (1) are correctly seated.

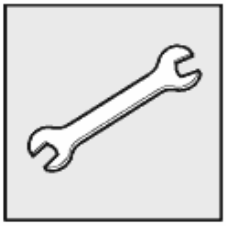

**Special tools required:**

- 00 9 341

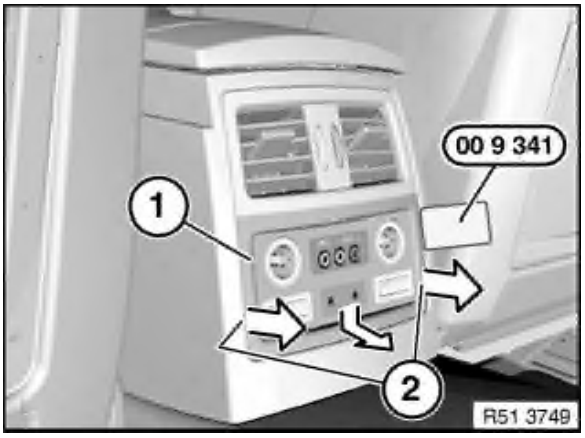


Unclip rear insert (1) with special tool 00 9 341 at retaining points (2) and pull back in direction of arrow.

Disconnect associated plug connections and remove rear insert (1).

**Manufactured by AMP:** The following contact types without strand sealing can be fitted in the socket housings:

- MQS (Micro Quadlock System)
- MPQ, width 2.8 mm (Micro Power Quadlock)
- MPQ, width 5.2 mm (Micro Power Quadlock)

**Manufactured by Siemens:** The following contact types without strand sealing can be fitted in the socket housings:

- Elo (electronic contact)
- Elo-Power 2.8 mm wide (electronic contact for heavy loads)
- Elo-Power 5.2 mm wide (electronic contact for heavy loads)

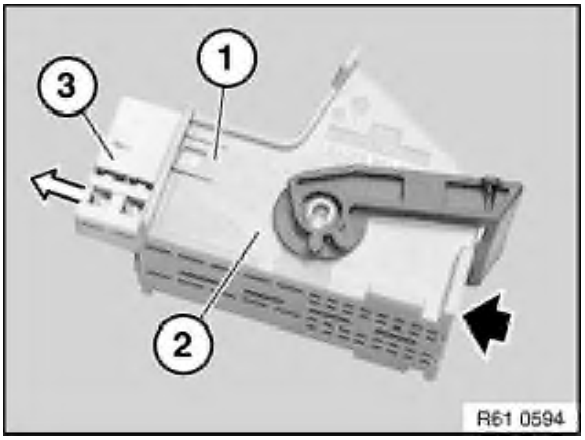


Raise lock (1) on housing (2).

Push contact carrier (3) from rear out of housing.

*Note:*

The second contact carrier is pushed out in the same way.

Pushing out the contact carrier releases the secondary locks of the socket contacts.

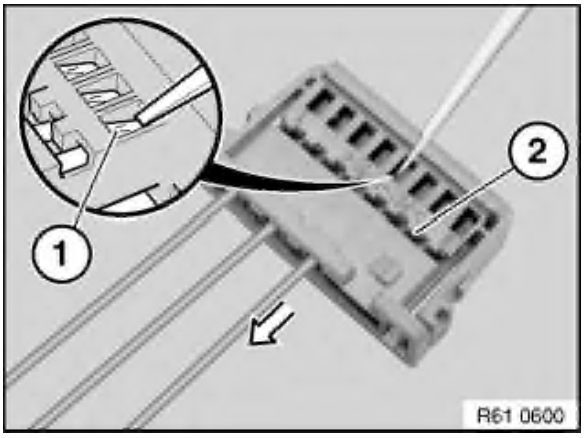


Hold down retaining hook (1) of socket contact in opening of contact carrier with a small screwdriver.

Pull wire with socket contact in direction of arrow as far as secondary lock (2).

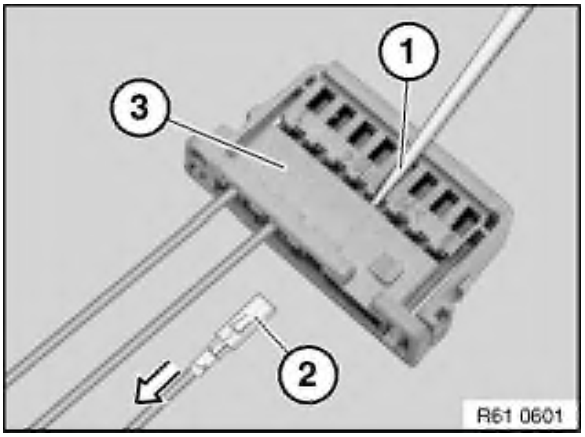


Hold down retaining hook in secondary lock (1) again and pull cable with socket contact (2) completely out of contact carrier (3).