Change language:

BMW TIS - 17 00 005 Draining and topping up coolant

Note:
After filling the cooling system, vent the system and check for leaks,
refer to 17 00 039.

17 00 005	Draining and topping up coolant
	Drain coolant! Warning! Danger of scalding! Only perform this work after engine has cooled down.
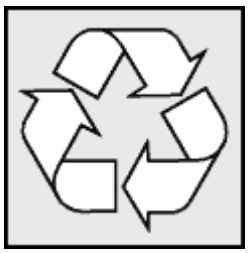	Recycling Catch and dispose of drained coolant. Observe country-specific waste-disposal regulations.
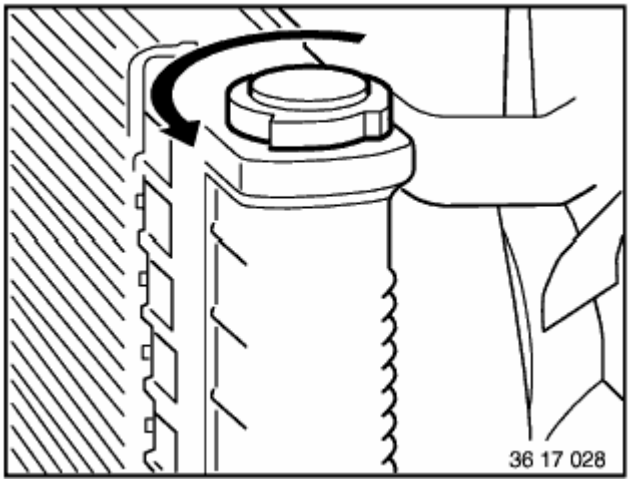	Unfasten cap on expansion tank.

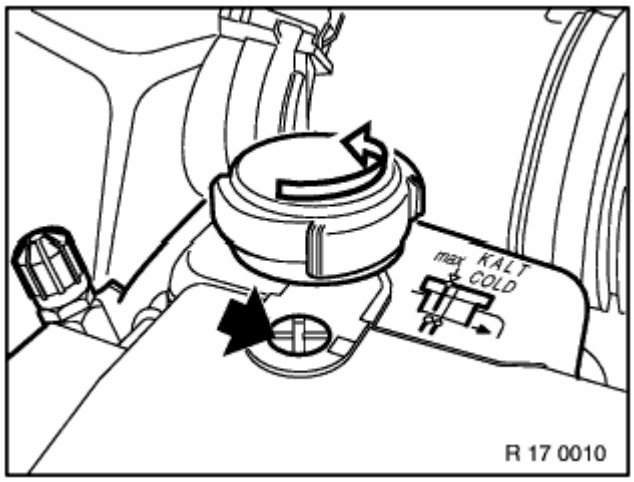	M62 Unfasten cap on expansion tank. Release vent screw.
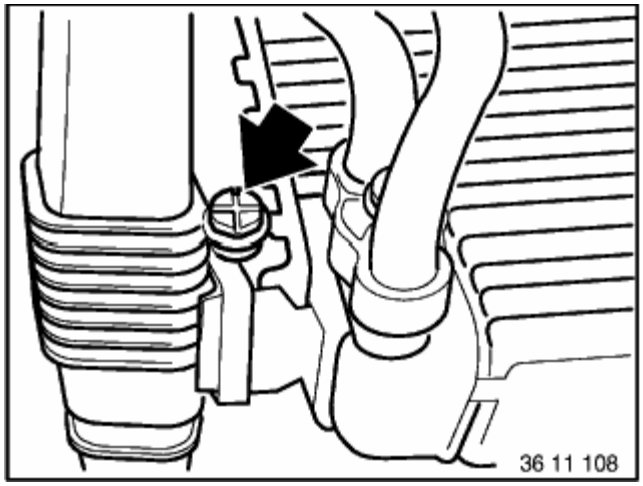	If necessary, remove front underbody protection. Unscrew drain plug at bottom of radiator. Installation: Replace seal. Tightening Torque, refer to Technical Data 17 11 2AZ. Drain, catch and dispose of coolant.
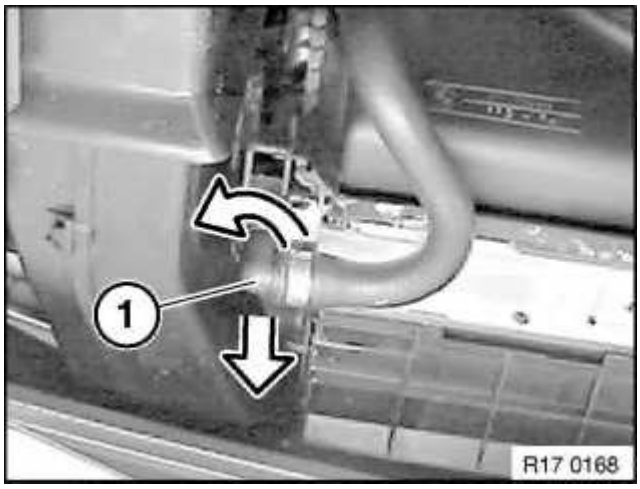	M62 If necessary, remove front underbody protection. Cars with automatic transmissions:ne Turn hose plug 2 to left and detach towards bottom. Cars with manual transmission:ne Remove drain plug at bottom of radiator. Drain, catch and dispose of coolant.

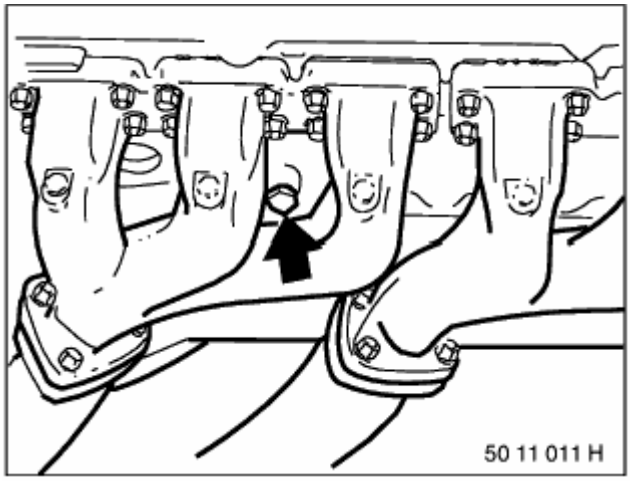	Unfasten drain plug on engine block. M62 Remove drain plugs on left and right of engine block. Installation: Replace seal. Tightening Torque, refer to Technical Data 11 11 5AZ. Drain, catch and dispose of coolant.
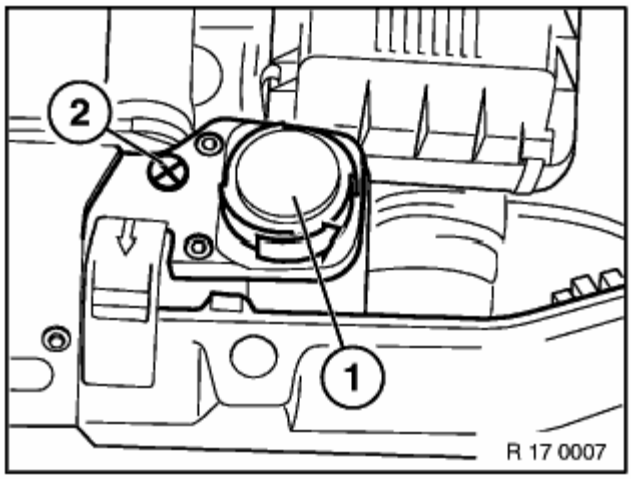	Top up coolant! Slacken vent plug on expansion tank.
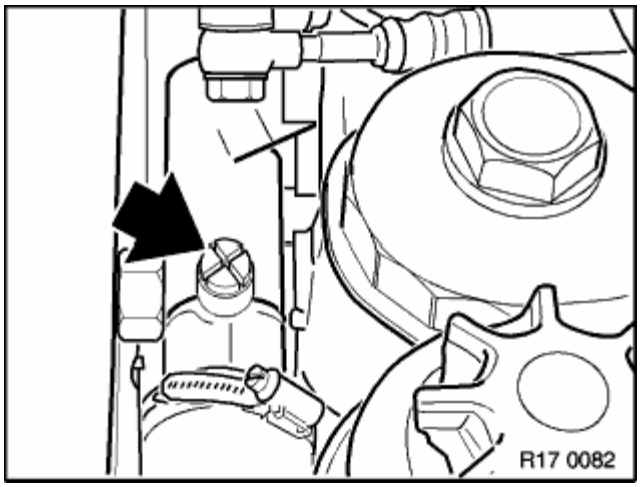	On vehicles with M52 engines, also unfasten additional vent screw.
	On cars with latent heat accumulators, do not turn on ignition when filling cooling system. Follow venting procedure

	specified in MG64, refer to 64 12 ...
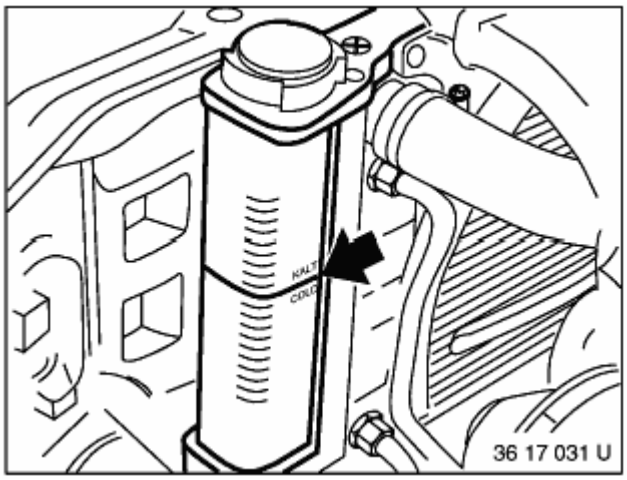	Note: Before filling: - Switch on ignition. - Set heater control to maximum temperature. - Set blower to low setting. This opens the heating valves and sets the auxiliary water pump in operation. Perform filling operation slowly. Fill up expansion tank fully and wait until bubble-free coolant emerges from vent point. Close vent plugs.
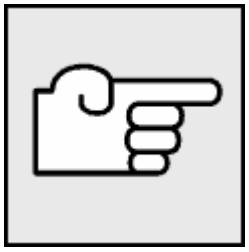	Note: Use only recommended coolant, refer to BMW Operating Fluids MG 17.
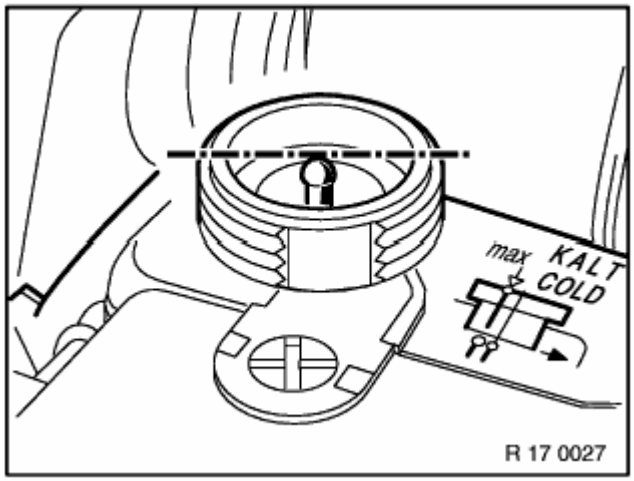	M62 Note: Before filling: - Switch on ignition. - Set heater control to maximum temperature. - Set blower to low setting. This opens the heating valves and sets the auxiliary water pump in operation. Perform filling operation slowly. Fill up expansion tank fully and wait until bubble-free coolant emerges from vent point. Close vent plugs.

Note:
Use only recommended coolant, refer to BMW Operating Fluids MG 17.

No posts yet.

Please register before posting.

Username Username
Password
Title Title
Content

UBB codes: [url] [email] [img] [quote] [b] [i] [small] [sub] [sup] [youtube]

Submit Post

Upload images:
File Browse...

Upload