Change language:

BMW TIS - 17 00 039 Bleeding cooling system and checking for water leaks

Caution!
These bleeding instructions only apply to vehicles without a latent heat accumulator.
On cars with latent heat accumulators, follow venting procedure set out in MG64.
On cars with independent heating, follow additional venting procedure.

17 00 039	Bleeding cooling system and checking for water leaks
	Warning! Danger of scalding! Only perform this work after engine has cooled down.
	Check cooling system for leaks. Top up coolant.
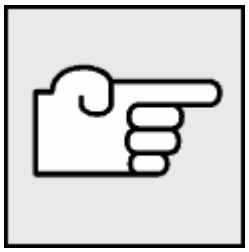	To ensure the cooling system is properly vented, it is absolutely essential to follow the steps below: 1. Undo cap but do not remove from expansion tank. This prevent excessive discharge of coolant from the expansion tank. 2. Turn on ignition. 3. Set heating controller to max. temperature. 4. Set blower to low level. This opens the heating valves and sets the auxiliary water pump in

	operation. 5. Run engine and briefly press accelerator pedal three to four times (approx. 4500 to 5000 rpm) to flush engine cooling circuit. 6. In doing so, do not run engine for longer than approx. 30 seconds; otherwise coolant will heat up and expand. 7. If the coolant level in the expansion tank drops in the process, top up the expansion tank to the max. cold fill level. 8. Screw on cap tightly and allow engine to warm up until thermostat opens. 9. Check coolant level. Pay attention to differing expansion tank designs.
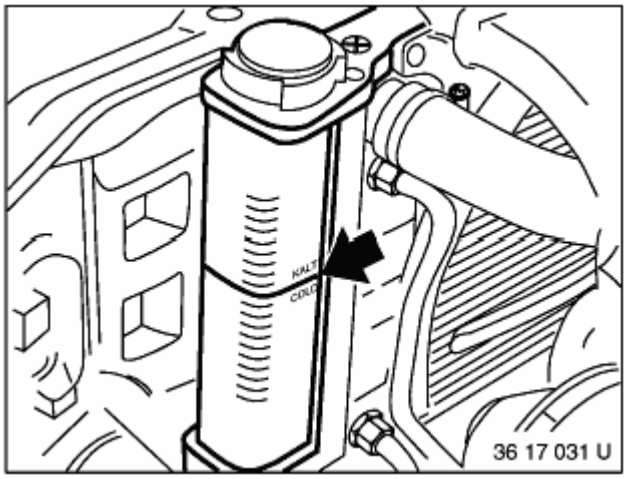	Transparent expansion tank : Allow engine to cool down before checking coolant level. Coolant temperature must not exceed 30° C. If ambient temperature exceeds 30° C, allow engine to cool down at least to ambient temperature. Check coolant level and if necessary top up coolant to max. cold fill level (see marking on expansion tank). Note: The tank mark indicates the fluid level at approx. 20° C. Use recommended coolant only.

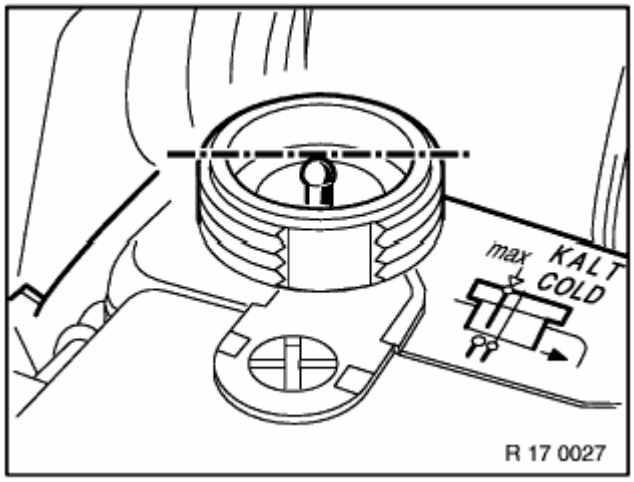

Black expansion tank :
Allow engine to cool down before checking coolant level. Coolant temperature must not exceed 30° C. If ambient temperature exceeds 30° C, allow engine to cool down at least to ambient temperature. Check coolant level and if necessary top up coolant to max. cold fill level (the ball on the float needle is on the same level as the top edge of the expansion tank).
Note:
The tank mark indicates the fluid level at approx. 20° C.
Use recommended coolant only.

No posts yet.

Please register before posting.

Username
Password
Title

Content

UBB codes: [url] [email] [img] [quote] [b] [i] [small] [sub] [sup] [youtube]

Submit Post

Upload images:
File

Browse...

Upload