Installation Instructions

Universal Accessories, Auxiliary Input

SUBJECT

Auxiliary Audio Input Kit - P/N 82 11 0 149 390

MODEL

5-Series (E39): *with In-dash CD and without Navigation*	**Vehicle Production 9/2002 – On**
X5 (E53) *with In-dash CD*: *with In-dash CD and without Navigation*	**Vehicle Production 10/2002 – On**
X3 (E83) *with Navigation or without Navigation*	**All Vehicle Production**

SUGGESTED INSTALLATION TIME: 0.5 Hours

These instructions were developed especially for BMW vehicles and are not to be compared to any existing instructions for vehicles other than BMW. No methods other than those specified in this document are to be used to install this Auxiliary Audio Input adapter in BMW vehicles.

PARTS INFORMATION

Contents of Kit – P/N 82 11 0 149 390

Description	QTY	BMW Part Number
AUX input cable	1	N/A
Faceplate	1	N/A
Mounting Screws	2	65 12 6 919 475
Cable ties (3mm x 104mm)	3	N/A

5-Series installation begins page 2
X5 installation begins page 5
X3 installation begins page 8

★ DO IT RIGHT THE FIRST TIME, ON TIME, EVERY TIME ★

© 2004 BMW of North America, LLC

Procedure:

5-Series

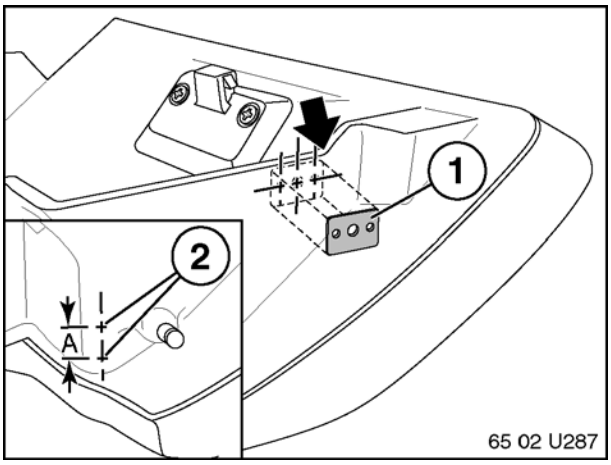

1. Remove radio from center console per instructions available in TIS. **(REF #65 11 030)**
2. Remove glove box per instructions available in TIS.
3. Using Auxiliary Input faceplate (1) as a template, line up right edge of faceplate against indentation of glovebox wall indicated by black arrow. Mark center-point of these 3 holes.
4. At rear edge of glovebox mark these 2 locations (2), beginning 3mm from base.
   A = 10 mm

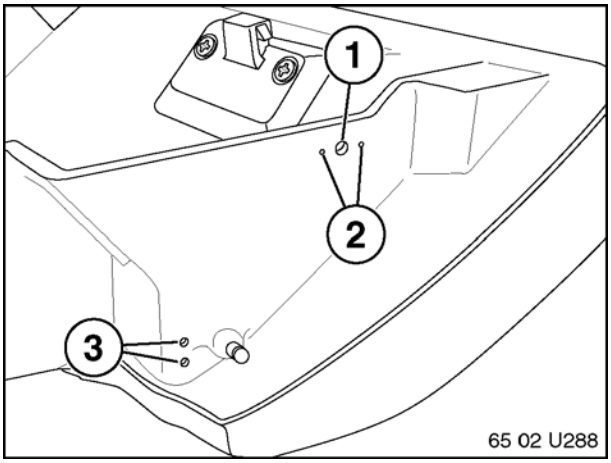

5. Drill three 2mm holes in locations (1)&(2).
6. Expand center hole (1) with a 10mm drill bit.
7. Drill 3mm holes in locations shown (3).

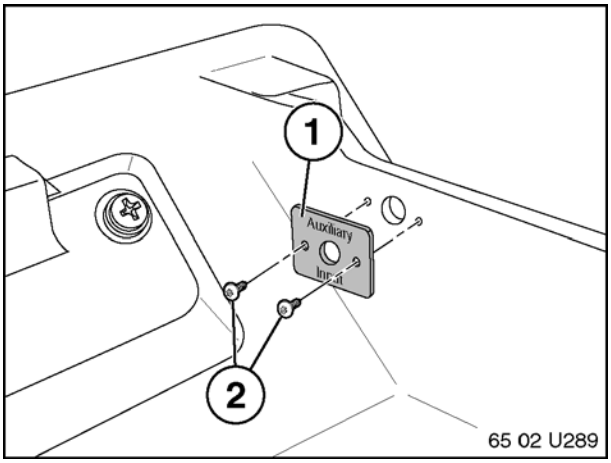

8. Mount Auxiliary faceplate (1) to interior of glovebox using provided screws (2).

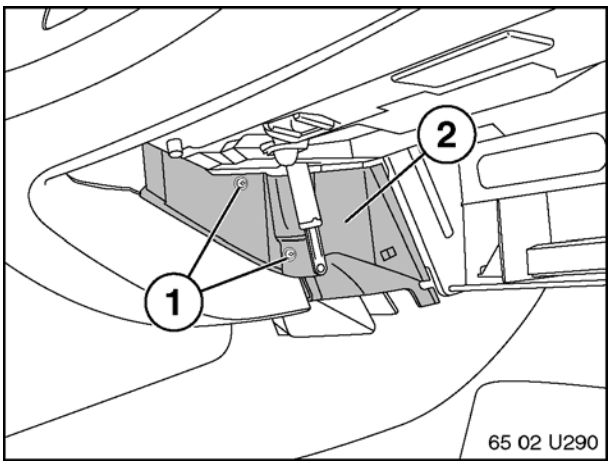

9. Remove 2 screws (1), then remove glovebox left side panel (2).

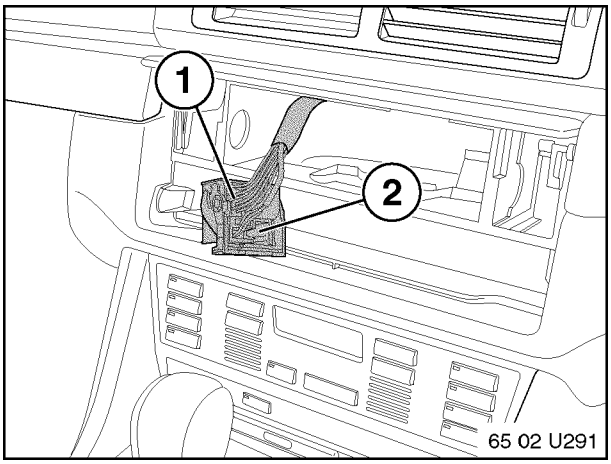

10. Locate radio harness (1) in center console.

11. Determine if vehicle already has black 12-pin connector in this location (2).

If Radio does not have Black 12-pin connector in this location (2), continue to Step 12.

If Radio already has black 12-pin connector in this location (2), proceed to Step 14.

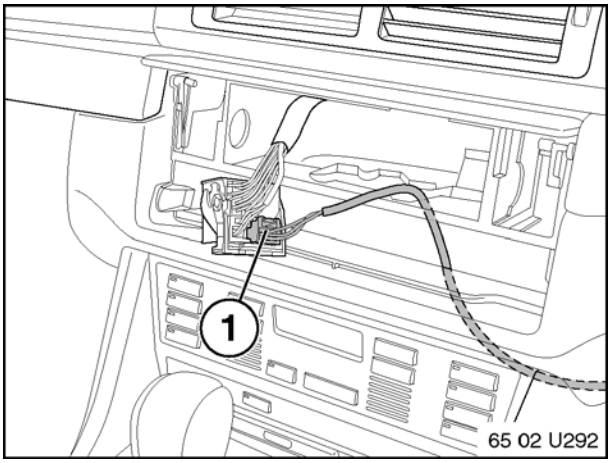

On vehicles <u>without</u> black 12-pin connector in radio harness:

12. Insert Auxiliary input connector into main radio harness connector (1).

13. Feed Auxiliary Input Cable into center console.

Proceed to step 18.

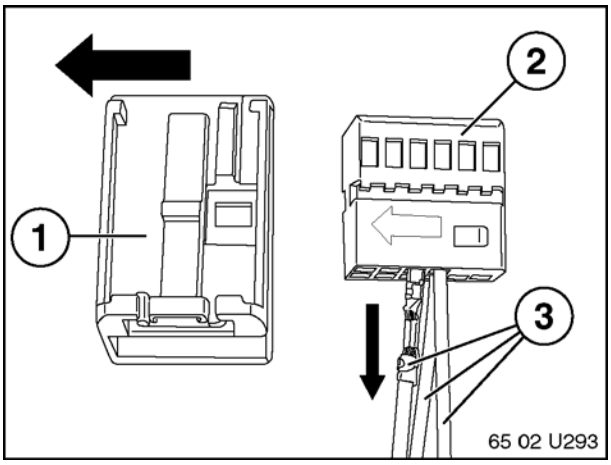

On vehicles with black 12-pin connector already installed in radio harness:

14. Remove Black housing (1) from Auxiliary Input Connector (2). Remove 3 terminals (3) from connector (2) by pushing in metal tangs on terminals using pin removal tool and pulling terminals out of connector.

Note: Take care not to damage these terminals since they will be reused.

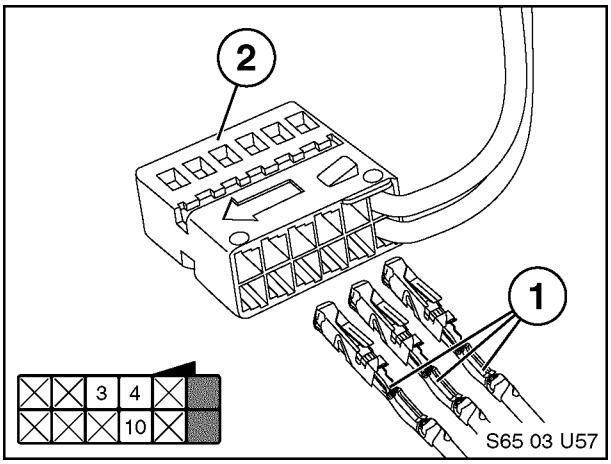

15. Remove Black 12-pin connector from rear of radio harness and remove black housing.

16. Insert 3 terminals (1) from Auxiliary adapter cable into existing 12-pin connector (2) in shown locations.

    White/Red - Slot 3
    White/Blue - Slot 4
    White/Brown - Slot 10

17. Re-install black housing on 12-pin connector, then re-insert into radio harness.

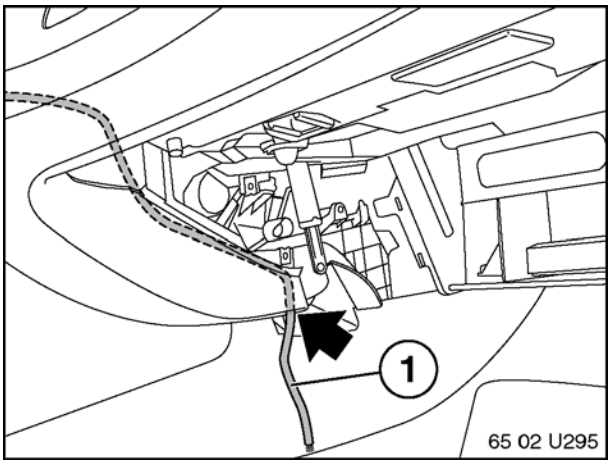

18. Route Auxiliary Input Cable (1) down through dashboard through position indicated by black arrow.

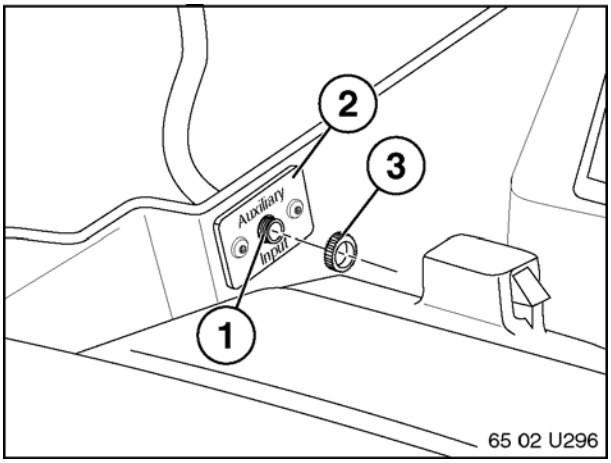

19. Insert Audio Jack (1) into faceplate (2) and secure with provided nut (3).

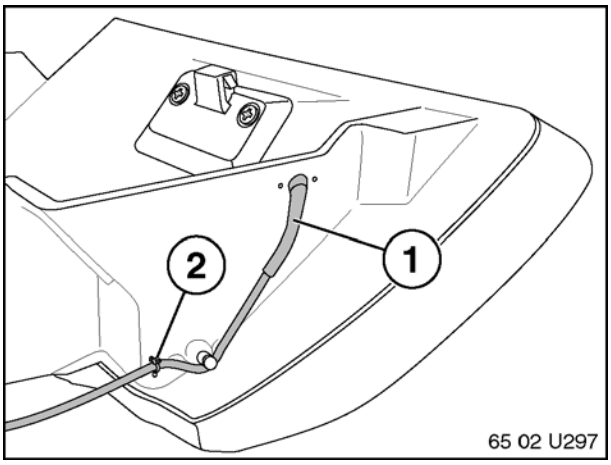

20. Fasten Auxiliary Input Cable (1) to side of glovebox by routing cable tie through holes (2). Remove excess material from cable tie.

***Caution*: Do not put extreme tension on Auxiliary Input Cable or damage may result.**

21. Re-install glove box side panel (removed in step 9).

22. Re-install glove box, removing slack from cable by pulling excess through radio mounting cavity. Secure excess cable in this location.

***Caution:* Please ensure that there is enough slack in Aux Input cable for safe removal of radio.**

23. Re-install radio and all components removed during installation.

24. Installation is complete. Test operation of system. Turn radio ON. Press “MODE” button on radio until “AUX” mode is displayed.

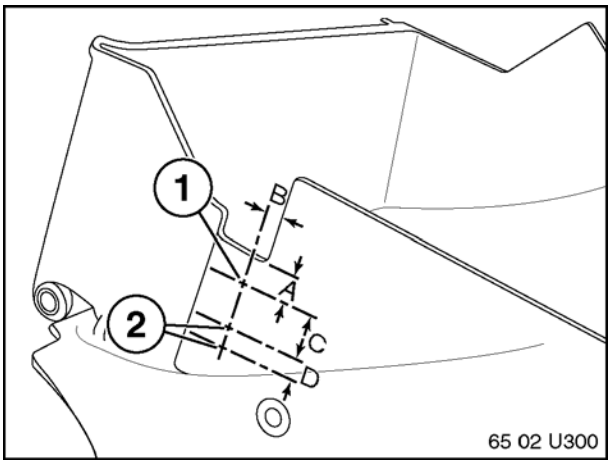

1. Remove radio from center console per TIS.
2. Remove glovebox assembly per TIS.
3. On left side of glovebox locate and mark 3 points (1) & (2).

A = 10 mm
B = 5 mm
C = 25 mm
D = 10 mm

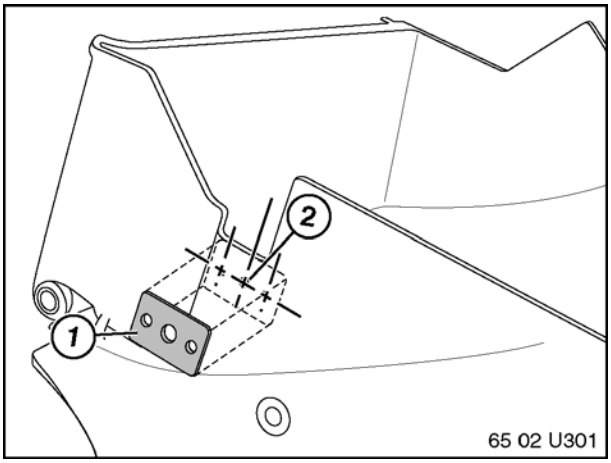

4. Using Auxiliary Input faceplate (1) as a template, line up center hole of faceplate against upper marked location (2). Mark center-point of 2 outer holes.

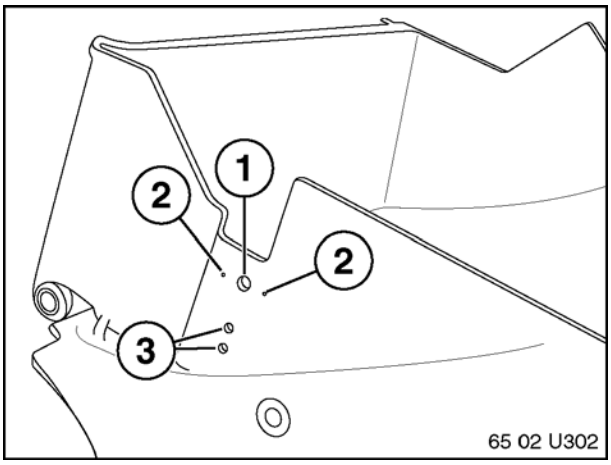

5. Drill three 2mm holes in locations (1)&(2).
6. Expand center hole (1) with a 10mm drill bit.
7. Drill two 3mm holes in location (3).

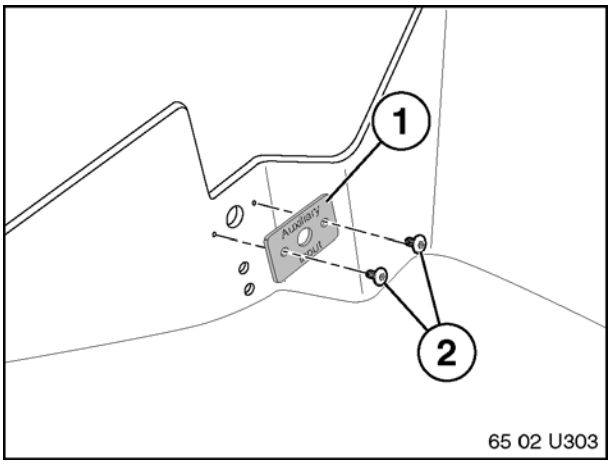

8. Mount Auxiliary Input faceplate (1) to interior of glovebox using provided screws (2).

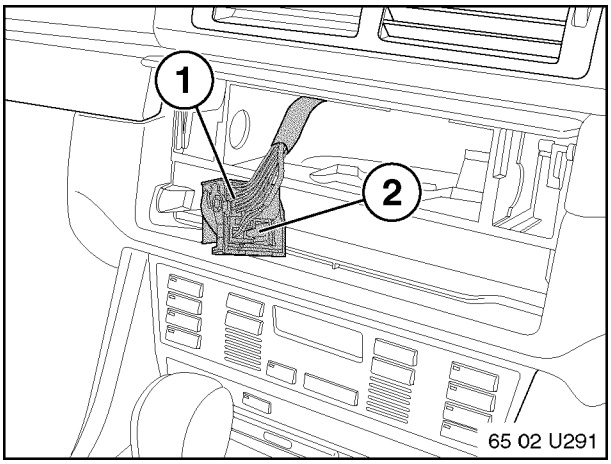

9. Locate main radio harness (1) in center console.

10. Determine if vehicle already has black 12-pin connector in radio harness (2).

If Radio does not have Black 12-pin connector in this location (2), continue to Step 11.

If Radio has black 12-pin connector in this location (2), proceed to Step 13.

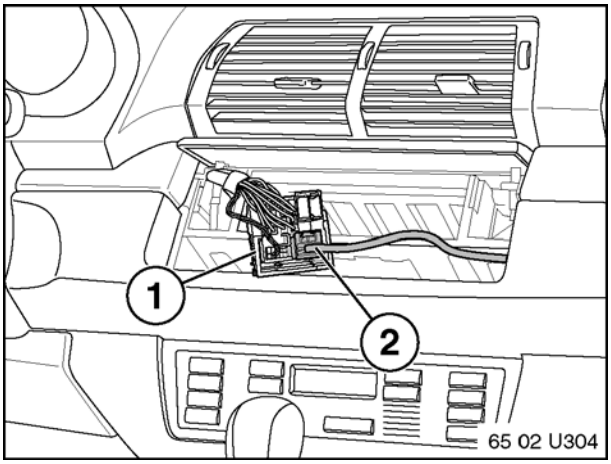

On vehicles <u>without</u> black 12-pin connector in radio harness connector

11. Insert Auxiliary input connector into main radio harness (1).

12. Feed Auxiliary Input Cable into center console.

Proceed to Step 17.

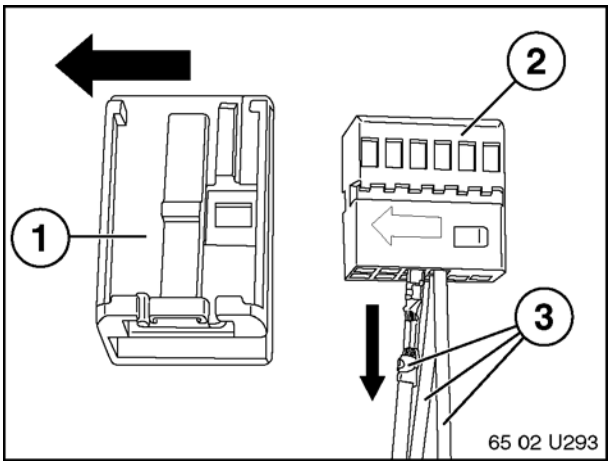

On vehicles with black 12-pin connector already in radio harness connector:

13. Remove Black housing (1) from Auxiliary Input Connector (2). Remove 3 terminals (3) from connector (2) by pushing in metal tangs on terminals with pin removal tool and pulling terminals out of connector.

Note: Take care not to damage these terminals since they will be reused.

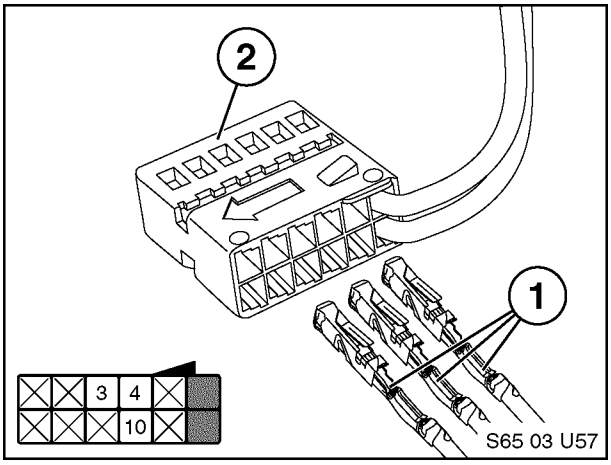

14. Remove Black 12-pin connector from radio harness and remove black housing.

15. Insert 3 terminals (1) of Auxiliary adapter cable into existing 12-pin connector (2) in shown locations.

    White/Red - Slot 3
    White/Blue - Slot 4
    White/Brown - Slot 10

16. Re-install black housing onto 12-pin connector, then re-insert into radio harness.

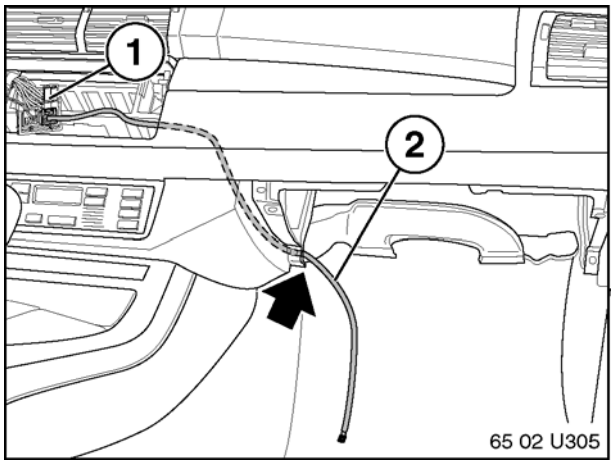

17. Route Auxiliary Input Cable (2) from radio harness (1) down through position indicated by black arrow.

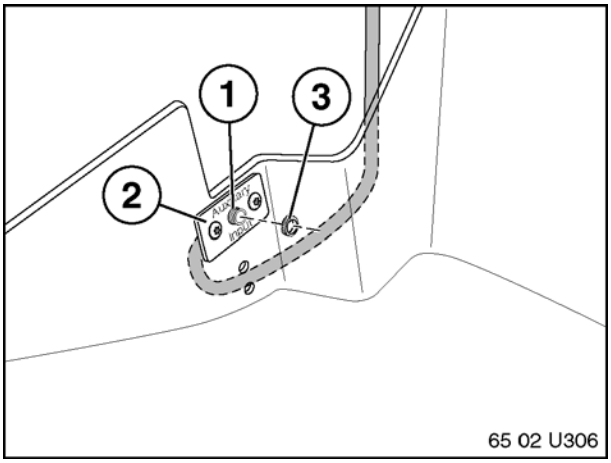

18. Insert Audio Jack (1) into faceplate (2) and secure with provided nut (3).

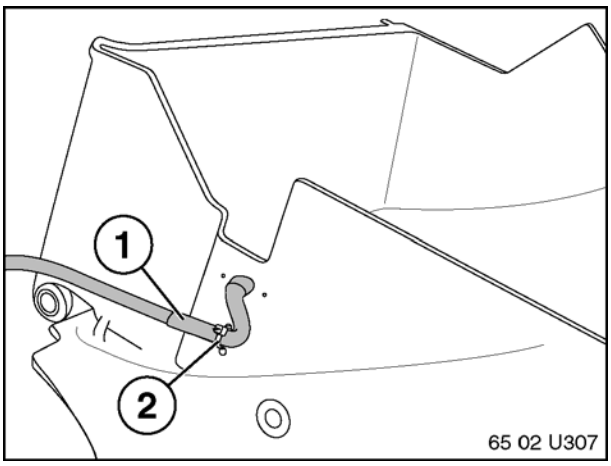

19. Fasten Auxiliary Input Cable (1) to side of glovebox by routing cable tie through holes (2). Remove excess material from cable tie.

<u>Caution</u>: Do not put extreme tension on Auxiliary Input Cable or damage may result.

20. Re-install glovebox assembly, removing slack from cable by pulling excess through radio mounting cavity. Secure excess cable in this location.

<u>Caution:</u> Please ensure that there is enough slack in Aux Input cable for safe removal of radio.

21. Re-install radio and all components removed during installation.

22. Installation is complete. Test operation of system. Turn radio ON. Press “MODE” button on radio until AUX mode is displayed.

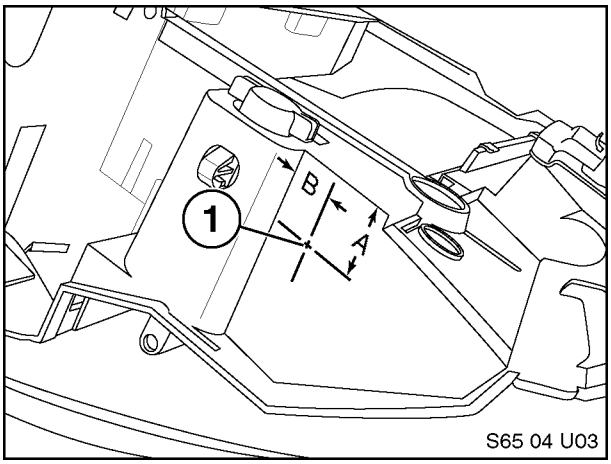

1. Remove radio from center console per TIS.
2. Remove glovebox assembly per TIS.
3. On left side of glovebox locate and mark center point (1).

A = 25 mm
B = 15 mm

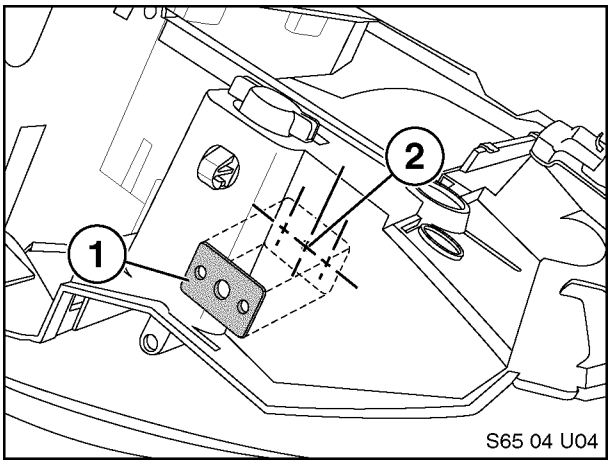

4. Using Auxiliary Input faceplate (1) as a template, line up center hole of faceplate against upper marked location (2). Mark center-point of 2 outer holes.

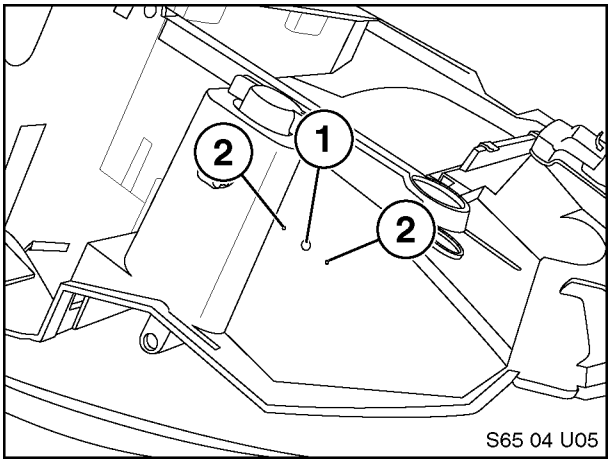

5. Drill three 2mm holes in locations (1) & (2).
6. Expand center hole (1) with a 10mm drill bit.

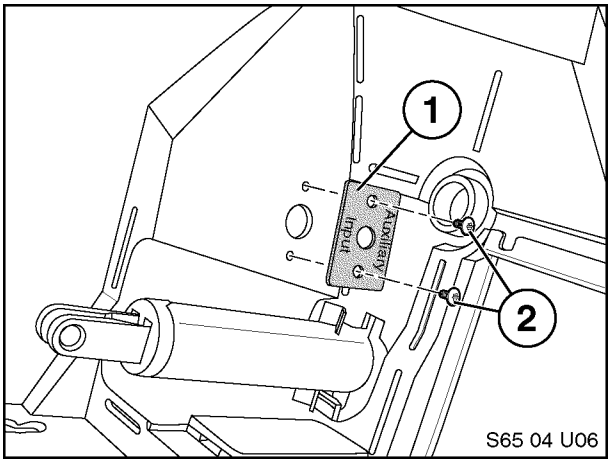

7. Mount Auxiliary Input faceplate (1) to interior of glovebox housing using provided screws (2) as indicated.

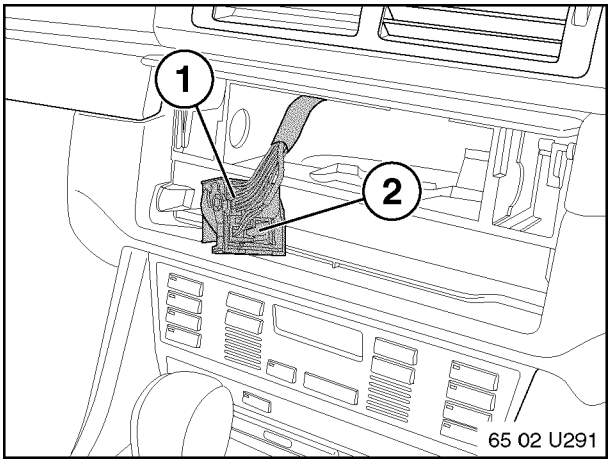

8. Locate main radio harness (1) in center console.

9. Determine if vehicle already has black 12-pin connector in harness (2).

If Radio does not have Black 12-pin connector in this location (2), continue to Step 10.

If Radio has black 12-pin connector in this location (2), proceed to Step 12.

Illustration: X5 shown, X3 Similar

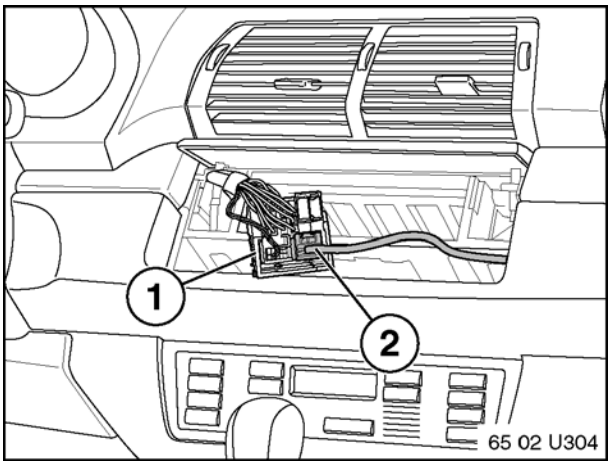

On vehicles <u>without</u> black 12-pin connector in radio harness connector

10. Insert Auxiliary input connector into main radio harness (1).

11. Feed Auxiliary Input Cable into center console.

Proceed to Step 16.

Illustration: X5 shown, X3 similar

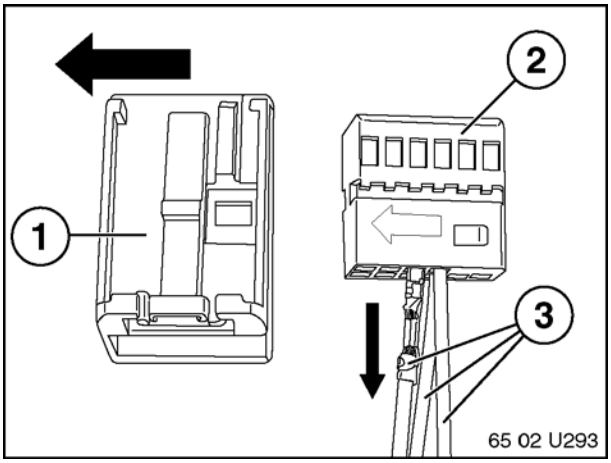

On vehicles with black 12-pin connector already in radio harness connector:

12. Remove Black housing (1) from Auxiliary Input Connector (2). Remove 3 terminals (3) from connector (2) by pushing in metal tangs on terminals with pin removal tool and pulling terminals out of connector.

Note: Take care not to damage these terminals since they will be reused.

13. Remove Black 12-pin connector from radio harness and remove black housing.

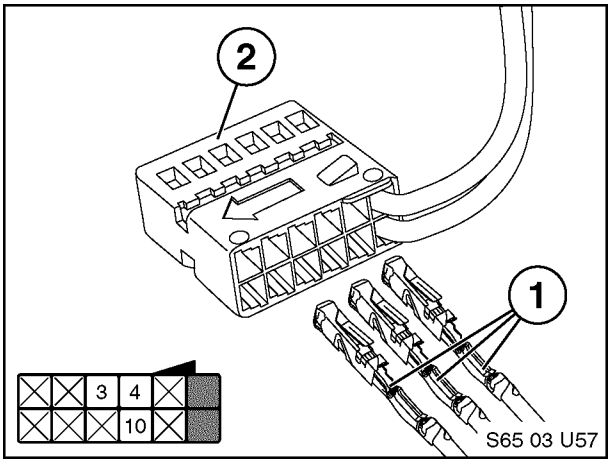

14. Insert 3 terminals (1) of Auxiliary adapter cable into existing 12-pin connector (2) in shown locations.

White/Red - Slot 3
White/Blue - Slot 4
White/Brown - Slot 10

15. Re-install black housing onto 12-pin connector, then re-insert into radio harness.

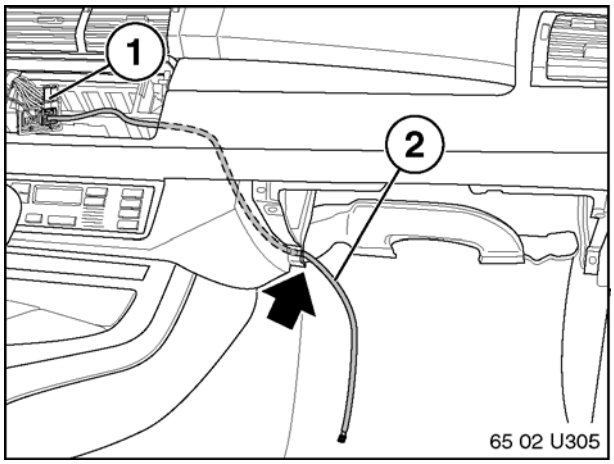

16. Route Auxiliary Input Cable (2) from radio harness (1) down through position indicated by black arrow.

Illustration: X5 shown, X3 similar

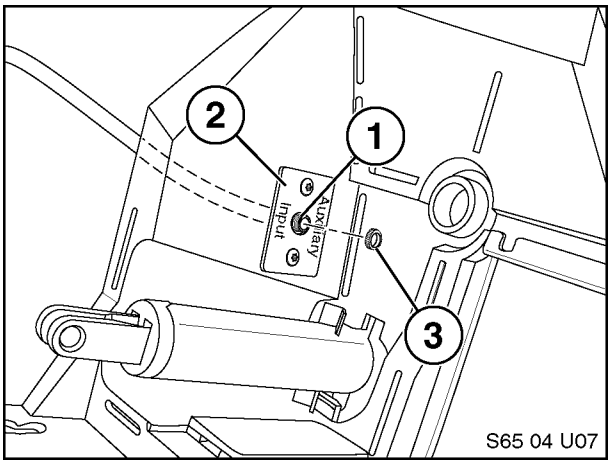

17. Insert Audio Jack (1) into faceplate (2) and secure with provided nut (3).

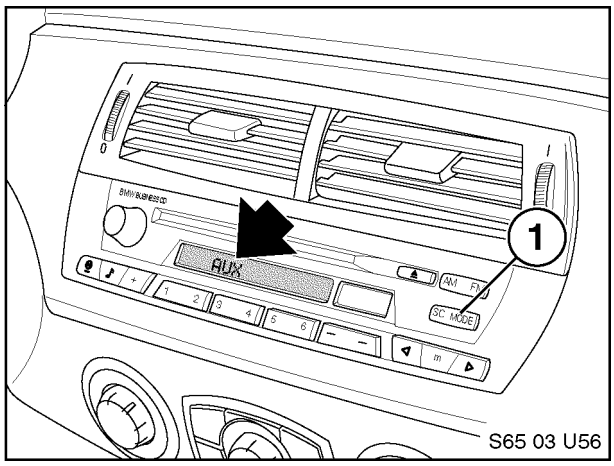

18. Re-install glovebox assembly, removing slack from cable by pulling excess through radio mounting cavity. Secure excess cable in this location.

<u>Caution:</u> Please ensure that there is enough slack in Aux Input cable for safe removal of radio.

19. Re-install radio and all components removed during installation.

20. Installation is complete. Test operation of system. Turn radio ON. Press “MODE” (1) button on radio until AUX mode is displayed.

Illustration: Z4 shown, X3 similar