E39 525i COMFORT SEAT FRAME/COVERS

+1 Like

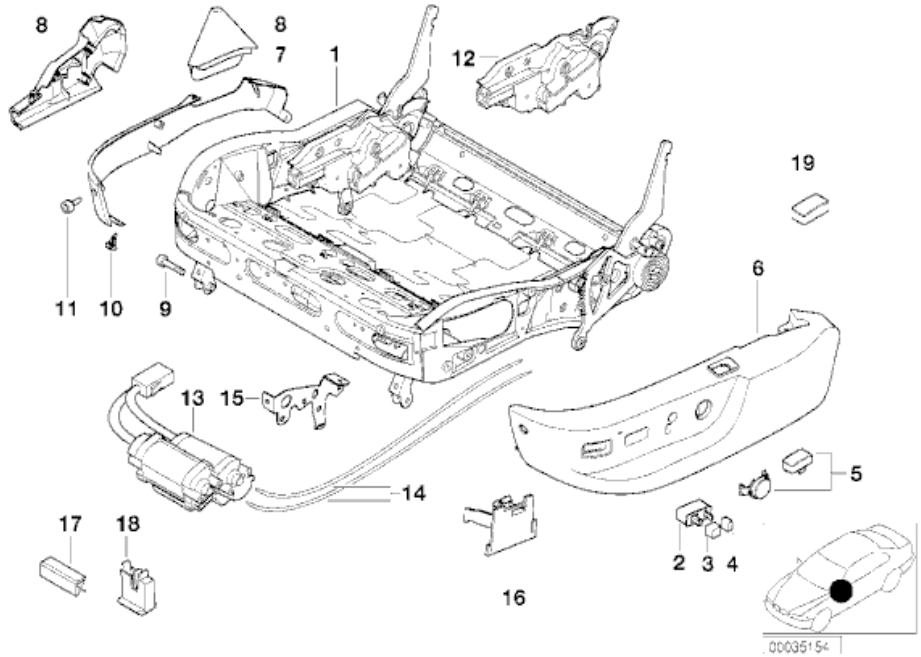

Sponsored links

No.	Description	Supplement	Qty	From	Up To	Part Number	Price	Notes	Photo
	ONLY APPLIES TO CO-DRIVERS SIDE								
01	Seat frame		2			52108150883	$739.75		
	For vehicles with								
	MEMORY								
	ONLY APPLIES TO DRIVER'S SIDE								
01	Seat frame		1			52108150915	$842.93		
	ONLY APPLIES TO CO-DRIVERS SIDE								
02	SWITCH SEAT ADJUSTING FRONT RIGHT		1	09/1995		61318368934	$154.88		
03	BUTTON F FRONT SEAT ADJUSTMENT		2			61311379369	$4.42		
04	FRONT LEFT BACKREST ADJUSTMENT BUTTON		1			61311379367	$4.42		
04	FRONT RIGHT BACKREST ADJUSTMENT BUTTON		1			61311379368	$4.42		
05	Set of covers	GRAU	1			52108219226	$12.22		
05	Set of covers	SCHWARZ	1			52108219227	$12.22		
05	Set of covers	MARINEBLAU	1			52108219228	$12.22		
05	Set of covers	SANDBEIGE	1			52108219230	$12.22		
	FOR								
	DRIVER AND CO-DRIVER								
06	COVERING OUTER	SCHWARZ	1			52107058008	$45.18		
06	COVERING OUTER	GRAU	1			52107058009	$45.18		
06	COVERING OUTER	MARINEBLAU	1			52107058010	$45.18		
06	COVERING OUTER	SANDBEIGE	1			52107058011	$45.18		
06	COVERING OUTER	ENGLISCHGRUEN	1			52107058013	$45.18		
06	COVERING OUTER	TOBACCO	1			52107058014	$45.18	+core	
06	COVERING OUTER	PEARLBEIGE	1			52107058015	$45.18		
06	COVERING OUTER	BURGUND	1	09/2001		52107058016	$45.18		
07	Covering inner	SCHWARZ	1	10/1997		52107058018	$21.32	+core	
07	Covering inner	GRAU	1	10/1997		52107058019	$21.32	+core	
07	Covering inner	MARINEBLAU	1	10/1997		52107058020		+core, ENDED	
07	Covering inner	ENGL.GRUEN	1	10/1997		52107058023		ENDED	
07	Covering inner	TOBACCO	1	10/1997		52107058024		ENDED	
07	Covering inner	PEARLBEIGE	1	10/1997		52107058025		ENDED	
08	Covering left	GRAU	1			52108175875	$53.99		
08	Covering right	GRAU	1			52108175876	$53.99		

08	Covering left	SCHWARZ	1			52108175877	$53.99	
08	Covering right	SCHWARZ	1			52108175878	$53.99	
08	Covering left	MARINEBLAU	1			52108175879	$47.99	
08	Covering right	MARINEBLAU	1			52108175880	$53.99	
08	Covering left	SANDBEIGE	1			52108175881	$53.99	
08	Covering right	SANDBEIGE	1			52108175882	$53.99	
	UPHOLSTERY LEATHER BUFFALO							
08	Covering left	ANTHRAZIT	1			52108160845	$45.18	
08	Covering right	ANTHRAZIT	1			52108160846	$45.18	
	For vehicles with							
	PYROTECHNICAL BELT TENSIONER							
	FOR							
	DRIVER AND CO-DRIVER							
08	Covering left	SCHWARZ	1	10/1997		52108238487	$5.60	
08	Covering right	SCHWARZ	1	10/1997		52108238488	$5.60	
09	Fillister-head screw	M6X20 ROT	4			52108150020	$0.46	
10	Clip		6			52101873544	$0.20	
11	Screw	M4X10	8		12/2003	52108162347		ENDED
11	Fillister-head screw	M4X10	8			07146977086	$0.48	
12	GEARBOX LEFT		1			52108192965	$215.12	
12	GEARBOX RIGHT		1			52108192966	$215.12	
	ONLY APPLIES TO CO-DRIVERS SIDE							
13	DRIVE F VERTICAL AND BACKR.TILT ADJUSTM.	FA. RHW/BOSCH	1			52108350152	$118.95	
	For vehicles with							
	MEMORY							
	ONLY APPLIES TO DRIVER'S SIDE							
13	DRIVE F VERTICAL AND BACKR.TILT ADJUSTM.		1			67318352193	$179.57	
14	Set of flexible shafts		2			52108157408	$66.36	
15	MOUNTING PARTS SET		2			52108157409	$30.86	
16	LEFT SUPPORTING PLATE		1			52108207405	$1.79	
16	Carrier plate, right		1			52108207406	$1.79	
17	SLIDING JAW		2			54128105582	$2.95	
18	Clip	GRUEN	2			52108221512	$0.35	
	For vehicles with							
	Electr. front seat adjustment	S458A=Yes						
19	Cover, switch, backrest top adjustment	SCHWARZ	2			52108207258	$3.38	
19	Cover, switch, backrest top adjustment	GRAU	2			52108207259	$3.38	
19	Cover, switch, backrest top adjustment	MARINEBLAU	2			52108207260	$2.90	
19	Cover, switch, backrest top adjustment	SANDBEIGE	2			52108207261	$3.38	
19	Cover, switch, backrest top adjustment	ENGLISCHGRUEN	2			52108207262	$2.90	

Notes

- +core = plus core charge (possibility of a return of the old part)
- ENDED = The part has been discontinued.

Sponsored links

Ads by RealOEM
Eres un experto usando catálogos de partes para BMW? Queremos ofrecerle una carrera con prospección como representante de servicio al cliente trabajando desde casa. Si usted esta interesado, pulsar acá y envié su **currículo**

Copyright © **RealOEM.com**